Cambridge Assessment International Education

Cambridge International AS & A Level

PHYSICS **9702/13**

Paper 1 Multiple Choice **May/June 2021**

1 hour 15 minutes

You must answer on the multiple choice answer sheet.

You will need: Multiple choice answer sheet
Soft clean eraser
Soft pencil (type B or HB is recommended)

INSTRUCTIONS

- There are **forty** questions on this paper. Answer **all** questions.
- For each question there are four possible answers **A**, **B**, **C** and **D**. Choose the **one** you consider correct and record your choice in soft pencil on the multiple choice answer sheet.
- Follow the instructions on the multiple choice answer sheet.
- Write in soft pencil.
- Write your name, centre number and candidate number on the multiple choice answer sheet in the spaces provided unless this has been done for you.
- Do **not** use correction fluid.
- Do **not** write on any bar codes.
- You may use a calculator.

INFORMATION

- The total mark for this paper is 40.
- Each correct answer will score one mark.
- Any rough working should be done on this question paper.

This document has **20** pages. Any blank pages are indicated.

© UCLES 2021

[Turn over

PapaCambridge

Data

speed of light in free space	$c = 3.00 \times 10^{8}\,\text{m s}^{-1}$
permeability of free space	$\mu_0 = 4\pi \times 10^{-7}\,\text{H m}^{-1}$
permittivity of free space	$\varepsilon_0 = 8.85 \times 10^{-12}\,\text{F m}^{-1}$
	$\left(\frac{1}{4\pi\varepsilon_0}\right. = 8.99 \times 10^{9}\,\text{m F}^{-1}\left.\right)$
elementary charge	$e = 1.60 \times 10^{-19}\,\text{C}$
the Planck constant	$h = 6.63 \times 10^{-34}\,\text{J s}$
unified atomic mass unit	$1\,\text{u} = 1.66 \times 10^{-27}\,\text{kg}$
rest mass of electron	$m_e = 9.11 \times 10^{-31}\,\text{kg}$
rest mass of proton	$m_p = 1.67 \times 10^{-27}\,\text{kg}$
molar gas constant	$R = 8.31\,\text{J K}^{-1}\,\text{mol}^{-1}$
the Avogadro constant	$N_A = 6.02 \times 10^{23}\,\text{mol}^{-1}$
the Boltzmann constant	$k = 1.38 \times 10^{-23}\,\text{J K}^{-1}$
gravitational constant	$G = 6.67 \times 10^{-11}\,\text{N m}^2\,\text{kg}^{-2}$
acceleration of free fall	$g = 9.81\,\text{m s}^{-2}$

© UCLES 2021

PapaCambridge

Formulae

uniformly accelerated motion	$s = ut + \frac{1}{2}at^2$ $v^2 = u^2 + 2as$
work done on/by a gas	$W = p\Delta V$
gravitational potential	$\phi = -\frac{Gm}{r}$
hydrostatic pressure	$p = \rho gh$
pressure of an ideal gas	$p = \frac{1}{3}\frac{Nm}{V}\langle c^2 \rangle$
simple harmonic motion	$a = -\omega^2 x$
velocity of particle in s.h.m.	$v = v_0 \cos \omega t$ $v = \pm\omega\sqrt{(x_0^2 - x^2)}$
Doppler effect	$f_o = \frac{f_s v}{v \pm v_s}$
electric potential	$V = \frac{Q}{4\pi\varepsilon_0 r}$
capacitors in series	$1/C = 1/C_1 + 1/C_2 + \ldots$
capacitors in parallel	$C = C_1 + C_2 + \ldots$
energy of charged capacitor	$W = \frac{1}{2}QV$
electric current	$I = Anvq$
resistors in series	$R = R_1 + R_2 + \ldots$
resistors in parallel	$1/R = 1/R_1 + 1/R_2 + \ldots$
Hall voltage	$V_H = \frac{BI}{ntq}$
alternating current/voltage	$x = x_0 \sin \omega t$
radioactive decay	$x = x_0 \exp(-\lambda t)$
decay constant	$\lambda = \frac{0.693}{t_{\frac{1}{2}}}$

© UCLES 2021

[Turn over

PapaCambridge

1 What is a reasonable estimate of the kinetic energy of an Olympic athlete sprinting in a 100 m race?

A 40 J **B** 400 J **C** 4000 J **D** 40 000 J

2 What is a unit of momentum?

A $kg\,m\,s^{-2}$ **B** $N\,s^{-1}$ **C** N s **D** $kg\,s\,m^{-1}$

3 What is the horizontal component of the force shown?

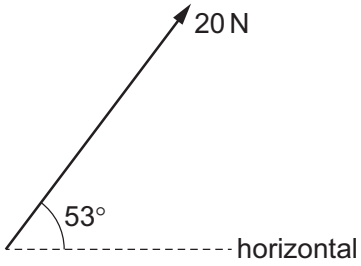

A 12 N **B** 16 N **C** 25 N **D** 27 N

4 The diagram shows two readings on a micrometer.

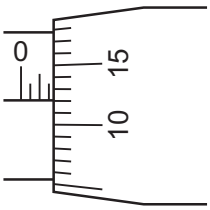

reading 1

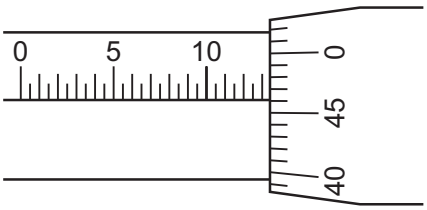

reading 2

What is the difference between the two readings?

A 10.34 mm **B** 11.84 mm **C** 12.34 mm **D** 12.84 mm

5 The diameter of a circular disc is measured as (7.0 ± 0.1) mm.

What is the area of the disc and the absolute uncertainty in the area?

	area of disc / mm^2	absolute uncertainty / mm^2
A	38.5	±0.5
B	38	±1
C	154	±2
D	154	±4

© UCLES 2021

PapaCambridge

6 The diagram shows a velocity–time graph for a car.

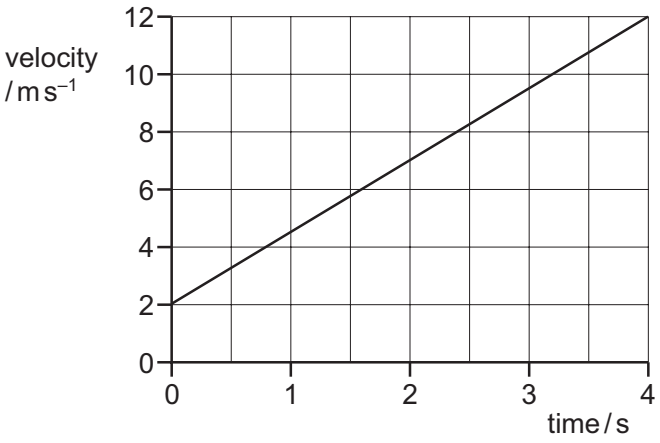

What is the distance travelled during the first 4.0 s?

A 2.5 m **B** 3.0 m **C** 20 m **D** 28 m

7 A steel ball is dropped from rest from a height h above the ground. The ball hits the ground after a time t.

This is repeated for a number of different heights.

The graph shows the variation of h with t^2 for the ball.

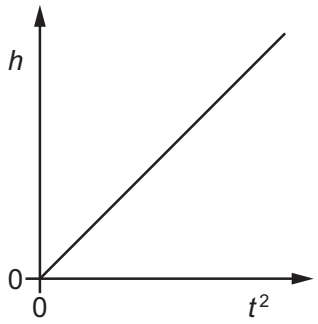

The gradient of the graph is G.

Which expression gives the acceleration of the ball?

A $\frac{G}{2}$ **B** G **C** $2G$ **D** G^2

PapaCambridge

8 Two masses, M and m, are connected by an inextensible string which passes over a frictionless pulley. Mass M rests on a frictionless slope, as shown.

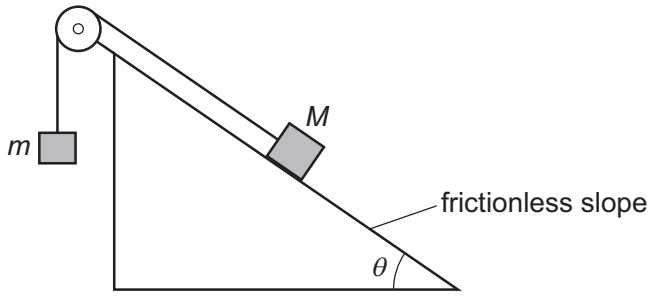

The slope is at an angle θ to the horizontal.

The two masses are initially held stationary and then released. Mass M accelerates down the slope.

Which expression **must** be correct?

A $\sin\theta < \frac{m}{M}$ **B** $\cos\theta < \frac{m}{M}$ **C** $\sin\theta > \frac{m}{M}$ **D** $\cos\theta > \frac{m}{M}$

9 The weights and masses of four different objects on the surfaces of four different planets are shown.

Which planet has the lowest value of acceleration of free fall at its surface?

	weight	mass
A	40 mN	6.0 g
B	3.0 N	500 g
C	10 N	1 kg
D	2.6 kN	750 kg

10 A rock in deep space is travelling towards a distant star and collides with a stationary spacecraft.

What is **not** a possible outcome of the collision?

A The rock becomes stationary and the spacecraft moves towards the star.

B The rock moves away from the star and so does the spacecraft.

C The rock moves away from the star and the spacecraft moves towards the star.

D The rock moves towards the star and so does the spacecraft.

© UCLES 2021

PapaCambridge

11 A steel ball is falling at a constant (terminal) speed in still air. The forces acting on the ball are upthrust, viscous drag and weight.

What is the order of increasing magnitude of these three forces?

A upthrust → viscous drag → weight

B viscous drag → upthrust → weight

C viscous drag → weight → upthrust

D weight → upthrust → viscous drag

12 What is a couple?

A a pair of equal forces acting in the same direction but along different lines

B a pair of forces that are equal and opposite but acting along different lines

C a pair of forces that produce no resultant force and no resultant moment

D a pair of unequal forces acting in opposite directions but along the same line

13 Four coplanar forces act on a rigid rod, as shown. The rod is hinged at P.

Which force produces the greatest moment about point P?

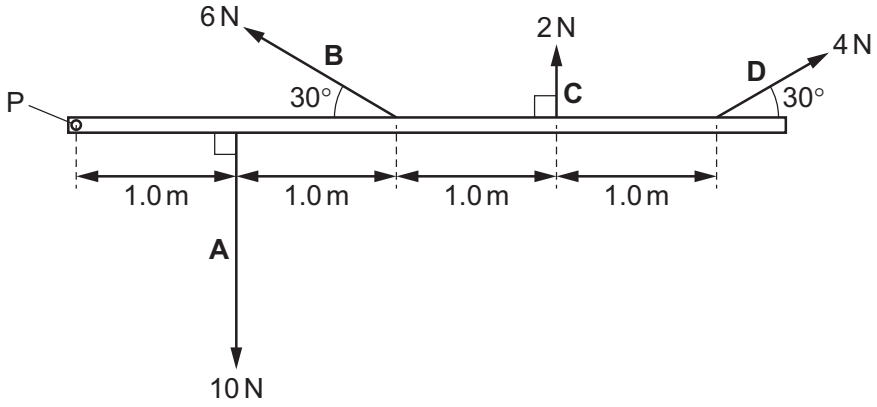

PapaCambridge

14 A book of weight W has a rectangular shape and is of uniform thickness. The book is held in a vertical plane so that the longer sides of the book are vertical, as shown.

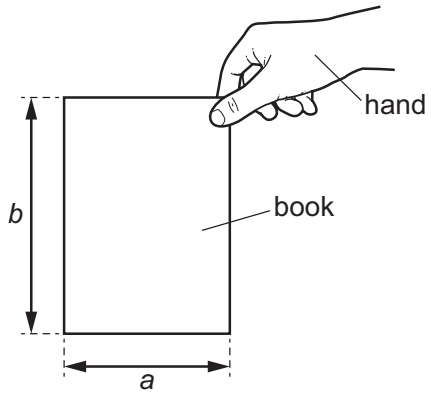

Which expression gives the approximate torque exerted by the hand on the book?

A $\frac{Wa}{2}$ clockwise

B $\frac{Wb}{2}$ anticlockwise

C Wa clockwise

D Wb anticlockwise

15 The derivation of the pressure equation $\Delta p = \rho g \Delta h$ uses a number of relationships between quantities.

Which relationship is **not** used in the derivation of this equation?

A density = $\frac{\text{mass}}{\text{volume}}$

B potential energy = mass × acceleration of free fall × height

C pressure = $\frac{\text{force}}{\text{area}}$

D weight = mass × acceleration of free fall

© UCLES 2021

PapaCambridge

16 A spring is initially neither compressed nor extended.

A force can be applied to this spring so that it is either compressed to a shorter length or extended to a longer length.

What is the change in the elastic potential energy in the spring when it is extended and when it is compressed?

	change in the elastic potential energy	
	spring is extended	spring is compressed
A	decreases	decreases
B	decreases	increases
C	increases	decreases
D	increases	increases

17 A sample of gas is sealed in a cylinder by a piston. The frictionless piston is free to move, so that the pressure of the gas remains constant at 1.80×10^5 Pa.

The gas initially occupies a volume of $2.40 \times 10^{-4}\,m^3$.

The gas now does 14.4 J of work.

What is the volume of the gas after doing this work?

A $0.80 \times 10^{-4}\,m^3$

B $1.60 \times 10^{-4}\,m^3$

C $3.20 \times 10^{-4}\,m^3$

D $4.00 \times 10^{-4}\,m^3$

© UCLES 2021

[Turn over

PapaCambridge

18 A car of mass 500 kg is at rest at point X on a slope, as shown.

The car's brakes are released and the car rolls down the slope with its engine switched off. At point Y the car has moved through a vertical height of 30 m and has a speed of 11 m s^{-1}.

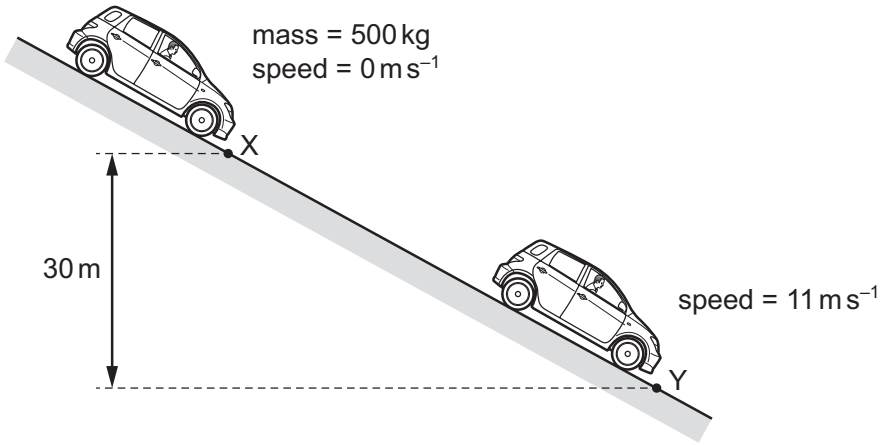

What is the energy dissipated by frictional forces when the car moves from X to Y?

A 3.0×10^4 J **B** 1.2×10^5 J **C** 1.5×10^5 J **D** 1.8×10^5 J

19 Which expression **cannot** be used to calculate power?

A $\dfrac{(\text{force} \times \text{displacement})}{\text{time}}$

B force × velocity

C $\dfrac{\text{work done}}{\text{time}}$

D work done × velocity

20 The stress σ in a material is given by the equation shown.

$$\sigma = \frac{F}{A}$$

The strain ε in the same material is given by the equation shown.

$$\varepsilon = \frac{x}{L}$$

Which expression gives the Young modulus of the material?

A $\dfrac{\varepsilon}{\sigma}$ **B** $\dfrac{Fx}{AL}$ **C** $\dfrac{\sigma x}{L}$ **D** $\dfrac{F}{A\varepsilon}$

© UCLES 2021

PapaCambridge

21 What is an example of plastic deformation?

A A rubber ball is momentarily compressed every time it hits the ground.

B A spoon stirring some coffee in a ceramic mug hits its surface and makes a clinking sound.

C A toolbox is left on a horizontal plank. When the toolbox is removed, the plank is no longer straight.

D The spring in some bathroom weighing scales is compressed by a person standing on the scales.

22 A transverse progressive wave of wavelength λ is set up on a stretched string. The graph shows the variation of displacement y with distance x at a particular instant of time. The wave has displacement $+y_1$ at distance $x = \frac{\lambda}{8}$.

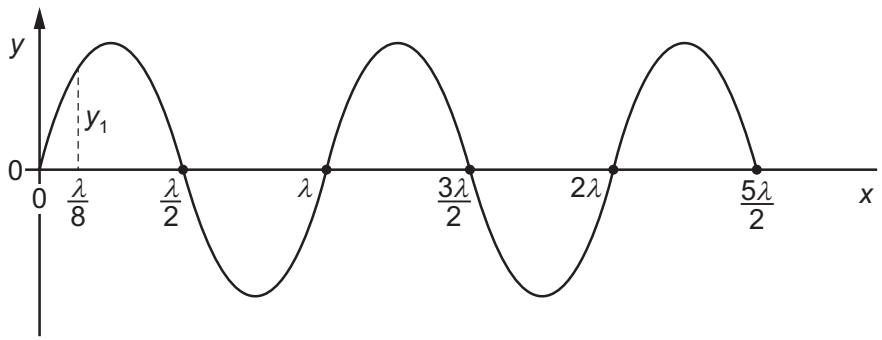

What are the next two values of x where the displacement y is again equal to $+y_1$?

A $\frac{3\lambda}{8}$ and $\frac{5\lambda}{8}$

B $\frac{3\lambda}{8}$ and $\frac{9\lambda}{8}$

C $\frac{5\lambda}{8}$ and $\frac{9\lambda}{8}$

D $\frac{9\lambda}{8}$ and $\frac{17\lambda}{8}$

© UCLES 2021

[Turn over

PapaCambridge

23 The graph shows the variation with time of the displacement of an air particle as a progressive sound wave passes through the air. The speed of sound in air is $330\,m\,s^{-1}$.

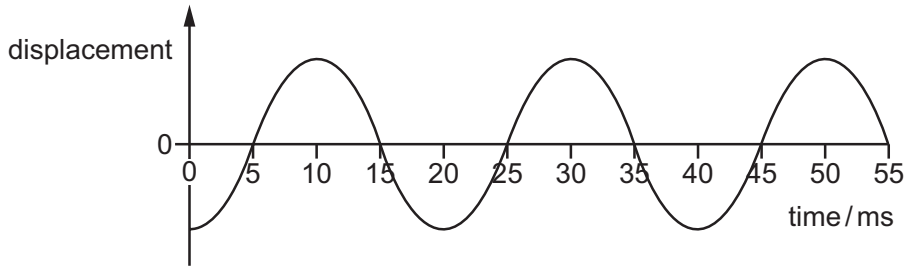

What is the wavelength of the wave?

A 6.6 m **B** 8.3 m **C** 20 m **D** 25 m

24 A microphone is connected to a cathode-ray oscilloscope (CRO). A sound wave of constant frequency is detected by the microphone. The screen of the CRO is shown.

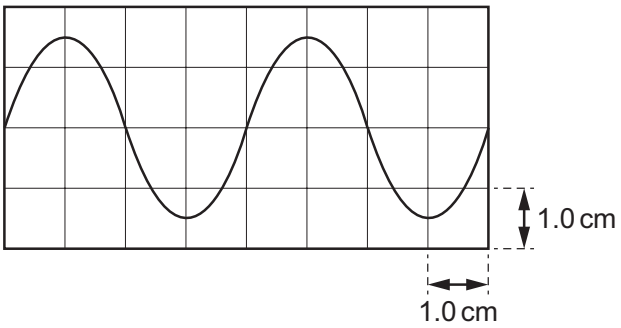

The time-base is set at $1.0\,ms\,cm^{-1}$.

What is the frequency of the sound wave?

A 250 Hz **B** 500 Hz **C** 670 Hz **D** 4000 Hz

25 A train's whistle is emitting sound of frequency 500 Hz as the train moves with a speed of $20\,m\,s^{-1}$ along a straight track. The train moves directly towards a stationary observer standing next to the track and then passes the observer.

The speed of sound in air is $330\,m\,s^{-1}$.

What is the difference between the frequencies of the sound heard by the observer before and after the train has passed the observer?

A 29 Hz **B** 32 Hz **C** 40 Hz **D** 61 Hz

© UCLES 2021

PapaCambridge

26 Gamma-rays, microwaves, visible light and X-rays are four regions of the electromagnetic spectrum.

Which list shows these four regions in order of increasing wavelength?

A microwaves → visible light → X-rays → gamma-rays

B gamma-rays → X-rays → visible light → microwaves

C X-rays → gamma-rays → microwaves → visible light

D microwaves → visible light → gamma-rays → X-rays

27 To produce a stationary wave, two waves must travel in opposite directions through the same space.

Which statement about the properties of the two waves **must** also be correct?

A The waves must have equal frequencies, but different speeds and wavelengths.

B The waves must have equal speeds, but different wavelengths and frequencies.

C The waves must have equal speeds, frequencies and wavelengths.

D The waves must have equal wavelengths, but different speeds and frequencies.

28 The speed of sound in air is $330\,m\,s^{-1}$.

Which size of architectural features in a large concert hall would best diffract sound waves of frequency 0.44 kHz?

A 1.3 mm **B** 750 mm **C** 7.5 m **D** 17 m

29 A double-slit interference pattern using red light of wavelength 7.0×10^{-7} m has a fringe spacing of 3.5 mm.

Which fringe spacing would be observed for the same arrangement of apparatus but using blue light of wavelength 4.5×10^{-7} m?

A 2.3 mm **B** 3.5 mm **C** 5.4 mm **D** 9.0 mm

© UCLES 2021

PapaCambridge

30 A beam of light of a single wavelength is incident normally on a diffraction grating.

The angle of diffraction θ is measured for each order of diffraction n. The distance between adjacent slits in the diffraction grating is d.

A graph is plotted to determine the wavelength of the light.

Which graph should be plotted and how is the wavelength determined from the graph?

	y-axis	x-axis	wavelength
A	n	$d \sin \theta$	gradient
B	n	$d \sin \theta$	1 / gradient
C	$\sin \theta$	d / n	gradient
D	$\sin \theta$	$d \times n$	1 / gradient

31 A particle has a charge of +2.0 mC and is in a vertical uniform electric field. An electric force of 1.0×10^{-2} N acts upwards on the particle.

What is the electric field strength?

A $0.20\,\text{V m}^{-1}$ downwards

B $0.20\,\text{V m}^{-1}$ upwards

C $5.0\,\text{V m}^{-1}$ downwards

D $5.0\,\text{V m}^{-1}$ upwards

32 The diagram shows two parallel metal plates connected to a d.c. power supply through a resistor.

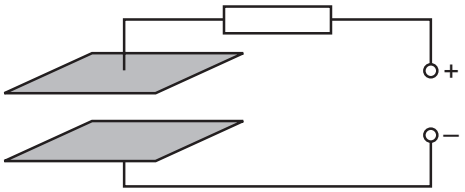

There is a uniform electric field in the region between the plates.

Which change would cause a **decrease** in the strength of the electric field?

A a small increase in the distance between the plates

B a small increase in the potential difference between the plates

C a small increase in the resistance of the resistor

D a small increase to the area of both plates

© UCLES 2021

PapaCambridge

33 A wire has a length of 12 cm and contains a total of 5.1×10^{22} free electrons.

When a potential difference is applied across the ends of the wire, the free electrons move with an average drift speed of $4.0 \times 10^{-6}\,\text{m s}^{-1}$.

What is the current in the wire?

A 0.0027 A **B** 0.0039 A **C** 0.27 A **D** 0.39 A

34 A battery is marked 9.0 V.

What does this mean?

A Each coulomb of charge from the battery supplies 9.0 J of electrical energy to the whole circuit.

B The battery supplies 9.0 J of electrical energy to an external circuit for each coulomb of charge.

C The potential difference across any component connected to the battery will be 9.0 V.

D There will always be a potential difference of 9.0 V across the battery terminals.

35 The diagram shows a circuit containing two batteries connected together.

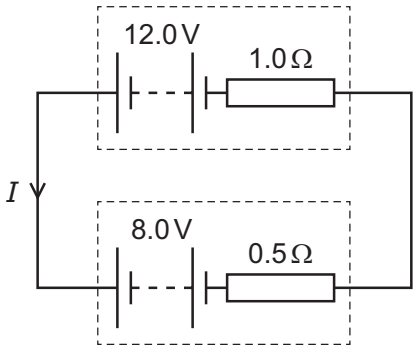

What is the current I?

A 2.7 A **B** 4.0 A **C** 8.0 A **D** 13 A

PapaCambridge

36 The circuit shown includes a cell of constant internal resistance and an external resistor R.

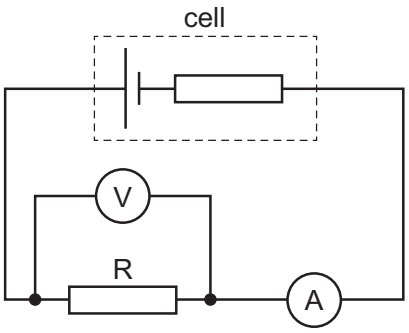

A student records the ammeter and voltmeter readings. She then connects a second identical external resistor in parallel with the first external resistor.

What happens to the ammeter reading and to the voltmeter reading?

	ammeter reading	voltmeter reading
A	decreases	decreases
B	decreases	stays the same
C	increases	decreases
D	increases	stays the same

37 A battery of electromotive force (e.m.f.) E and negligible internal resistance is connected to four resistors of resistances R_1, R_2, R_3 and R_4.

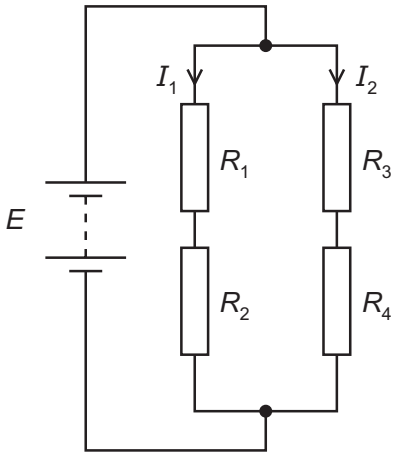

The currents I_1 and I_2 in the resistors are as shown.

Which equation is correct?

A $0 = I_1(R_1 + R_2) + I_2(R_3 + R_4)$

B $0 = I_1(R_1 + R_2) - I_2(R_3 + R_4)$

C $E = I_1(R_1 + R_2) + I_2(R_3 + R_4)$

D $E = I_1(R_1 + R_2) - I_2(R_3 + R_4)$

© UCLES 2021

PapaCambridge

38 In the circuit shown, a potentiometer of total resistance 120 Ω is connected in parallel with a resistor of resistance 150 Ω and a resistor of resistance *R*.

The battery has electromotive force (e.m.f.) 12 V and negligible internal resistance.

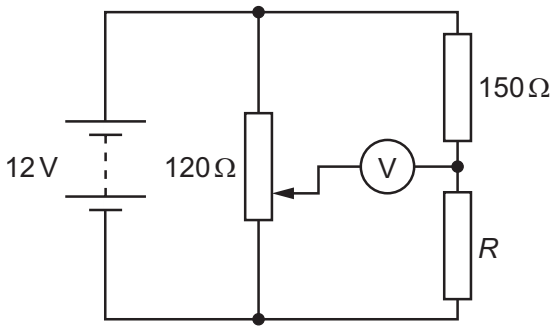

The voltmeter reads 0 V when the slider of the potentiometer is $\frac{1}{4}$ of the way from its lower end, as shown.

What is resistance *R*?

A 30 Ω **B** 38 Ω **C** 50 Ω **D** 450 Ω

39 A beam of α-particles is incident on a thin gold foil. One α-particle collides head-on with a gold nucleus and is deflected back along its original path.

Which statement could explain why the recoil speed of the gold nucleus is small compared with the recoil speed of the α-particle?

A Most α-particles are only slightly deflected as they pass through the gold foil.

B The α-particle and the gold nucleus repel each other.

C The mass of the gold nucleus is much greater than the mass of the α-particle.

D The momentum of the α-particle decreases as it approaches the gold nucleus.

40 A hadron is composed of three quarks. The hadron has a charge.

What is a possible quark composition of the hadron?

A down, down, up

B down, up, strange

C up, strange, strange

D up, up, strange

© UCLES 2021

PapaCambridge

BLANK PAGE

© UCLES 2021

PapaCambridge

BLANK PAGE

© UCLES 2021

PapaCambridge

BLANK PAGE

Permission to reproduce items where third-party owned material protected by copyright is included has been sought and cleared where possible. Every reasonable effort has been made by the publisher (UCLES) to trace copyright holders, but if any items requiring clearance have unwittingly been included, the publisher will be pleased to make amends at the earliest possible opportunity.

To avoid the issue of disclosure of answer-related information to candidates, all copyright acknowledgements are reproduced online in the Cambridge Assessment International Education Copyright Acknowledgements Booklet. This is produced for each series of examinations and is freely available to download at www.cambridgeinternational.org after the live examination series.

Cambridge Assessment International Education is part of the Cambridge Assessment Group. Cambridge Assessment is the brand name of the University of Cambridge Local Examinations Syndicate (UCLES), which itself is a department of the University of Cambridge.

© UCLES 2021

PapaCambridge